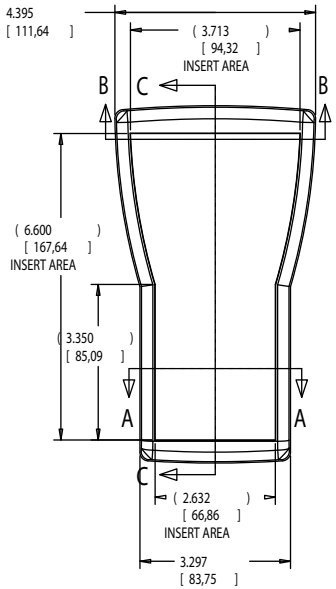

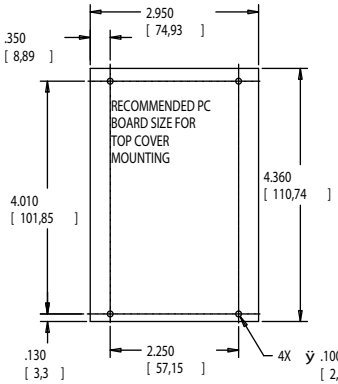

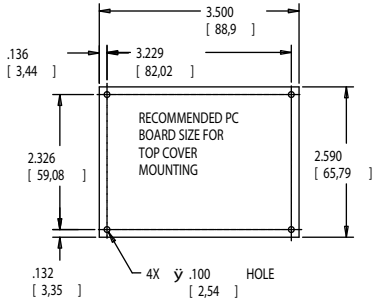

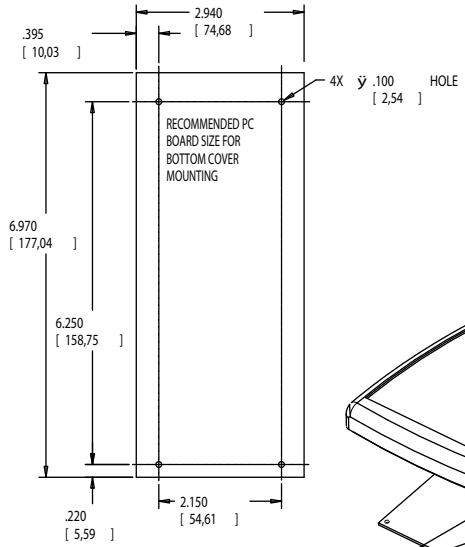

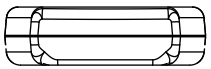

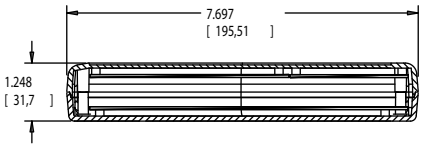

SECTION C-C

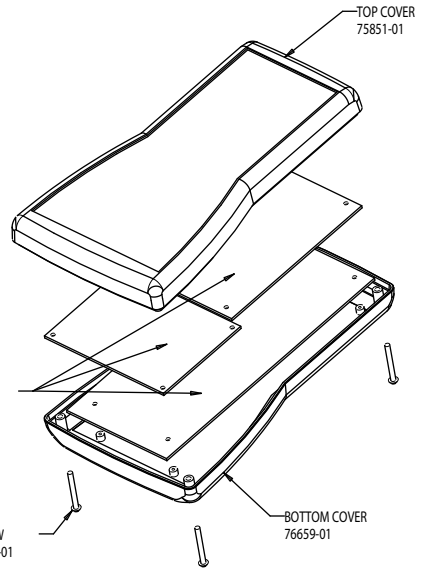

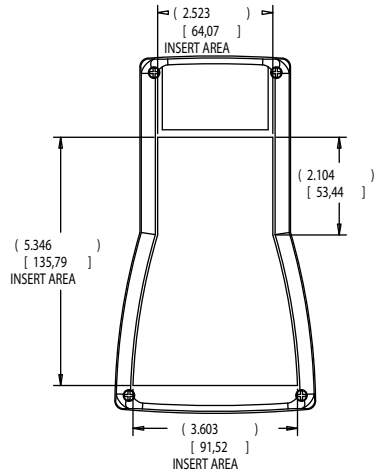

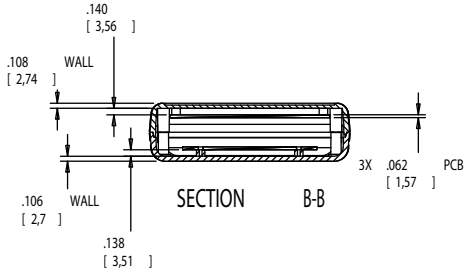

SECTION B-B

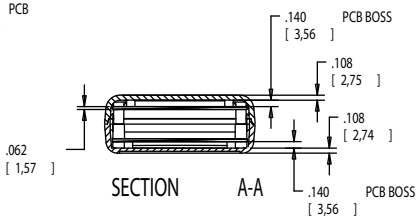

SECTION A-A

PACNTEC®
1-610-361-4200

TR

VISIT PACNTEC®
ON THE WORLD WIDE WEB
www.pactecenclosures.com

COLOR / MATERIAL CODE		
COLOR	94HB	94VO
BLACK	000	028
P.C.BONE	039	060

DRAWING NUMBER	REV
77697	B